accucold

ARG8PV-CRT

50" x 23.38" x 24.38" (H x W x D)

Performance series 8 cu.ft. upright glass door controlled room temperature cabinet for pharmaceuticals and vaccines in a white finish with lock and antimicrobial silver-ion handle

Highlights:

Controlled room temperature cabinet to store medication, pharmaceuticals, and other sensitive materials at 72ºF

Intelligent microprocessor digital temperature controller

Adjustable operating control range from 68 to 77ºF (preset to 72ºF)

Product Features:

Controlled Room Temperature Cabinet	Purpose-built design to store medication, pharmaceuticals, and other sensitive materials at 72ºF
Purpose-built design	Designed and purpose-built to support manufacturer recommendations for storage of pharmacy, medication, and vaccines within 20° - 25°C (68° - 77°F) as defined by USP 1079> Good Storage and Distribution Practices for Drug Products
+/-1.5ºC Variation	The published temperature variation is derived from the maximum deviation of an NTC sensor in a 1 oz. vial located nearest the chamber geometric center during a 24 hour test period
Stable operation	Designed to maintain a set temperature, even when ambient room temperature is as cold as 68ºF or as high as 86ºF
Antimicrobial silver ion-coated handle	Powder-coated handle with naturally occurring silver ions to help reduce the spread of germs
Adjustable temperature	Intuitive controls let you adjust the interior temperature between +68 to +77ºF
Temperature alarm	Visual and audible alarms alert if the interior temperature rises or falls out of set range
Remote alarm contacts	Electronic controller is equipped with a volt-free contact for alarm forwarding to an external remote system (contacts located in the external rear of the unit)
Automatic defrost with adjustable cycle defrost	Adjustable cycle defrost operation ensures the unit avoid temperature spikes and ice buildup

accucold

ARG8PV-CRT Specifications:

Overview	
Nominal Height	50.0" (127 cm)
Height of Cabinet	50.0" (127 cm)
Nominal Width	24.0" (61 cm)
Width	23.38" (59 cm)
Width with Door Open	23.88" (61 cm)
Nominal Depth	25.0" (64 cm)
Depth	24.38" (62 cm)
Depth with Handle	26.13" (66 cm)
Depth with door at 90°	46.5" (118 cm)
Capacity	8.0 cu.ft. (227 L)
Defrost Type	Automatic
Door	Glass
Cabinet	White
US Electrical Safety	ETL
Canadian Electrical Safety	ETL-C
Amps	1.4
Voltage/Frequency	115 V AC/60 Hz
Weight	166.0 lbs. (75 kg)
Parts & Labor Warranty	2 Years
Compressor Warranty	5 Years
UPC	761101090474
Refrigerator Features	
Door Swing	RHD
Reversible	Yes
Shelf Type	Wire
Shelf Qty	7
Adjustable Shelves	Yes
Thermostat Type	Digital
Fan Type	Interior
Refrigerant Type	R600a
Refrigerant Amount	1.73oz.
Interior Light	Yes
Temperature Range	68 to 77ºF (preset to 72ºF)
Dimensions	

Interior Height	41.25" (105 cm)
Interior Width	20.0" (51 cm)
Interior Depth	17.0" (43 cm)
Compressor Step Height	6.5" (17 cm)
Compressor Step Width	20.0" (51 cm)
Compressor Step Depth	5.0" (13 cm)

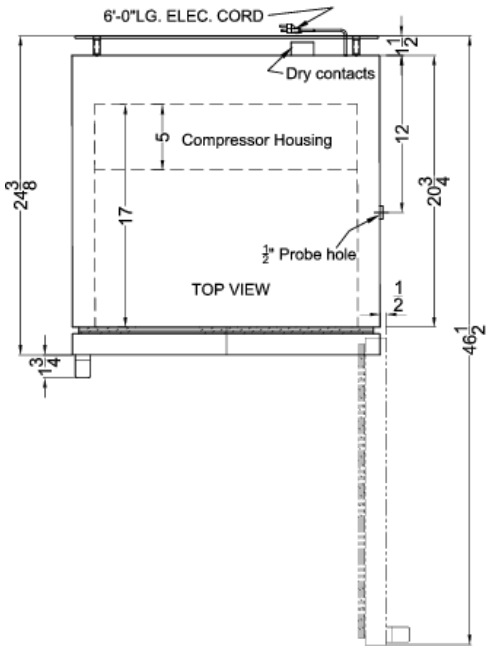

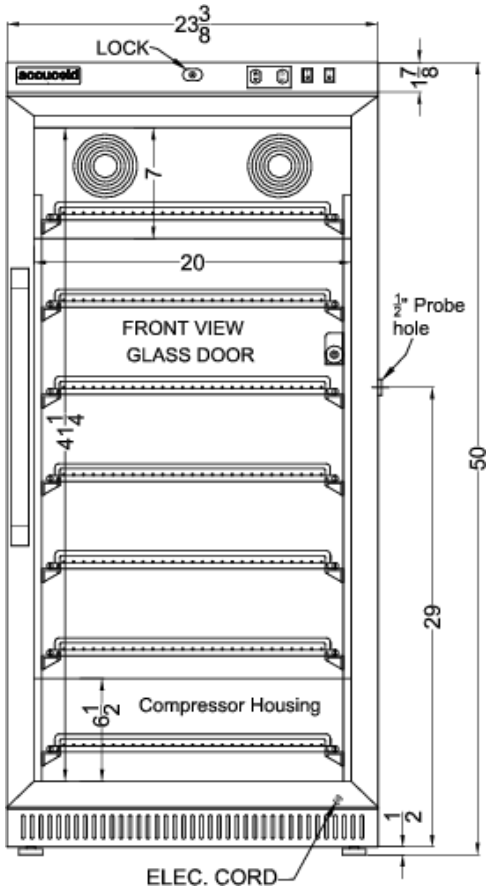

ACCUCOLD DIVISION, FELIX STORCH, INC. | ISO 9001:2015 Certified
770 Garrison Avenue Bronx, NY 10474 USA **TEL** 718-893-3900 **FAX** 844-478-8799 info@accucold.com **www.accucold.com**